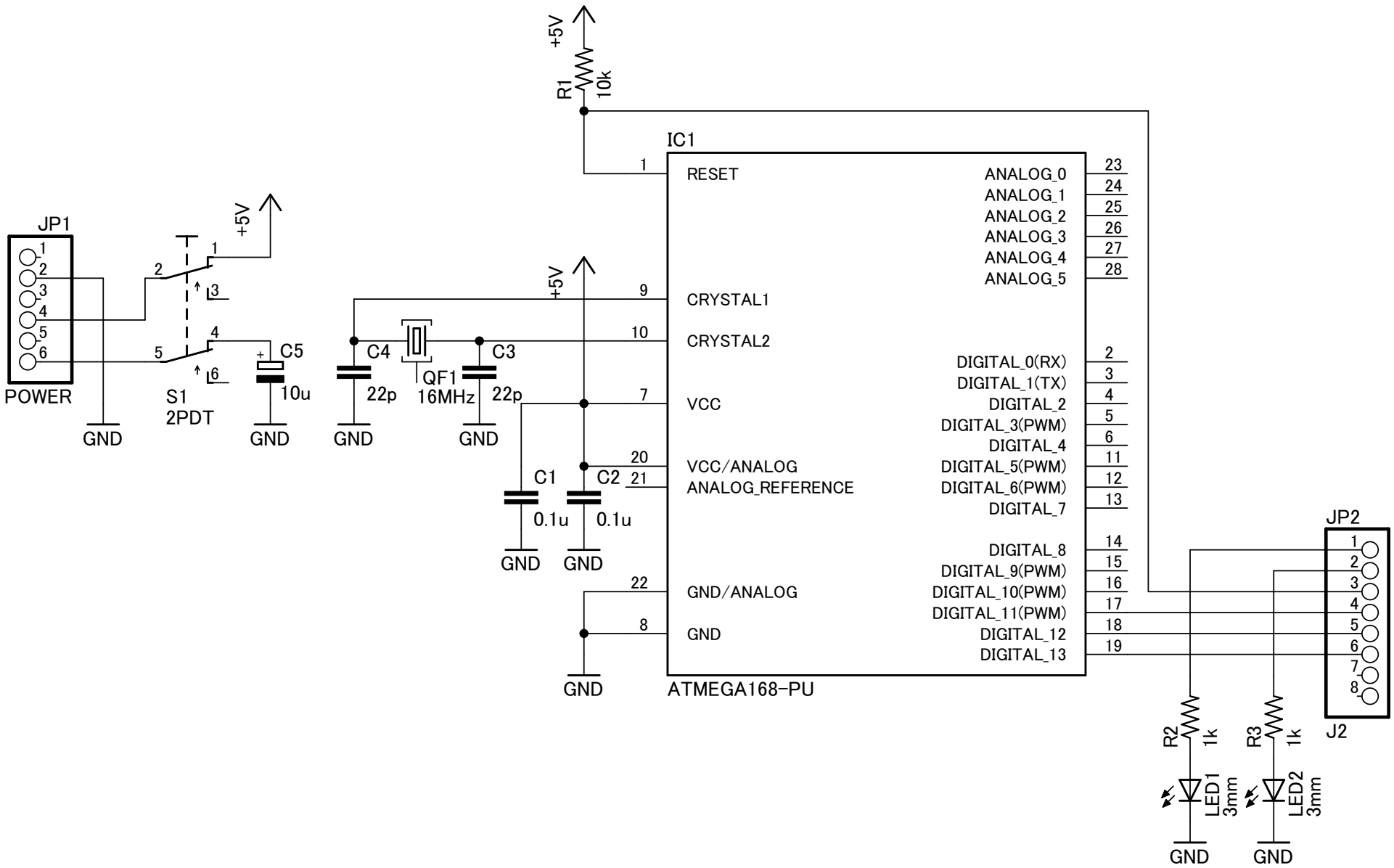
JP1
POWER
GND
S1
2PDT
+5V
C5
10u
GND
C4
22p
GND
QF1
16MHz
C3
22p
GND
+5V
R1
10k
IC1
RESET
CRYSTAL1
CRYSTAL2
VCC
VCC/ANALOG
ANALOG_REFERENCE
GND/ANALOG
GND
ANALOG_0
ANALOG_1
ANALOG_2
ANALOG_3
ANALOG_4
ANALOG_5
DIGITAL_0(RX)
DIGITAL_1(TX)
DIGITAL_2
DIGITAL_3(PWM)
DIGITAL_4
DIGITAL_5(PWM)
DIGITAL_6(PWM)
DIGITAL_7
DIGITAL_8
DIGITAL_9(PWM)
DIGITAL_10(PWM)
DIGITAL_11(PWM)
DIGITAL_12
DIGITAL_13
ATMEGA168-PU
C1
0.1u
C2
0.1u
GND
GND
GND
GND
JP2
J2
R2
1k
R3
1k
LED1
3mm
LED2
3mm
GND
GND