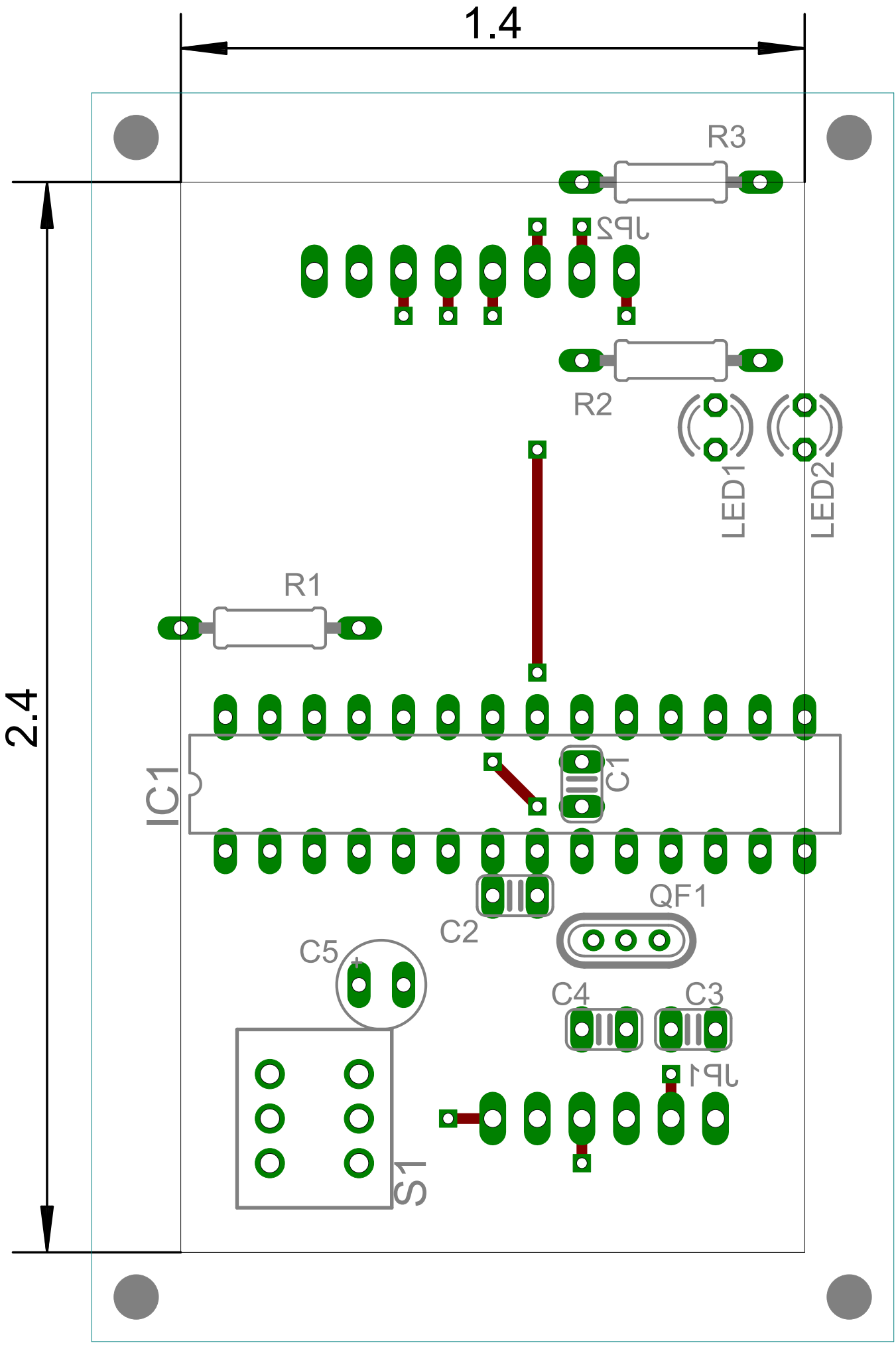
1.4
2.4
R3
JP2
R2
LED1
LED2
R1
IC1
C1
C2
QF1
C5
C4
C3
JP1
S1

1.4
4.5
R3
JP2
R2
LED5
LED4
R1
IC1
C3
QF1
C2
C5
C8
C4
JP1
C7